BER0071 (74") & BER0072 (80")

INSTRUCTION SHEET **UPDATE KIT FOR 74"-80"DRIVE SHAFT**

APPLICATION: SA74-L, SA80-L snowblowers

INSTALLATION

1. **Figure 1:** Loosen the idler bolt (item 1) and detach the idler spring. Remove the front guard (item 2) by removing the two bolts and nuts (items 3-4). Remove the chain (item 4), taking care to remember its course and the orientation of the coupling link lock.

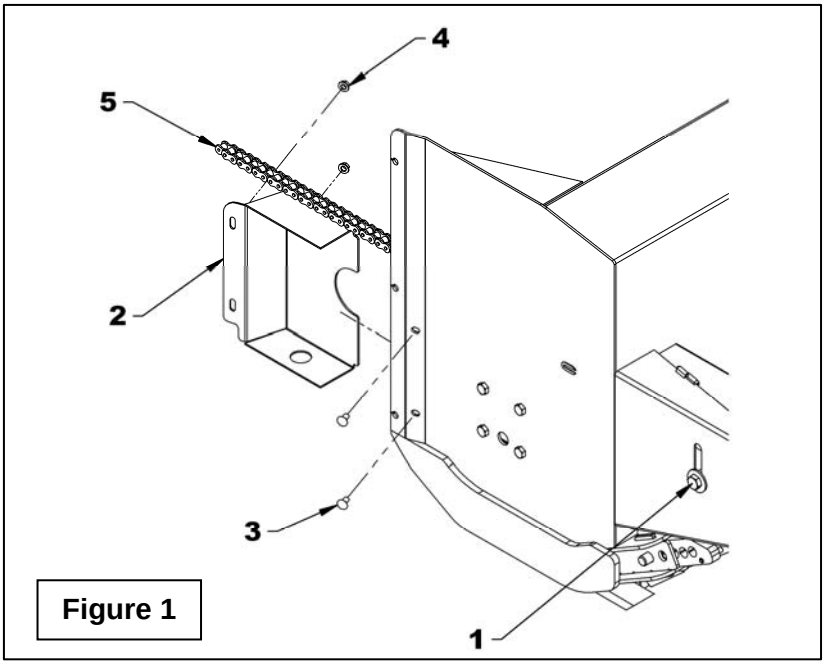

Figure 1

2. **Figure 2:** Remove the rear guard (item 4) by unscrewing the knob (item 5). Remove the drive shaft (item 1) by unscrewing the four bolts and nuts (items 2-3). Keep this hardware for further use.

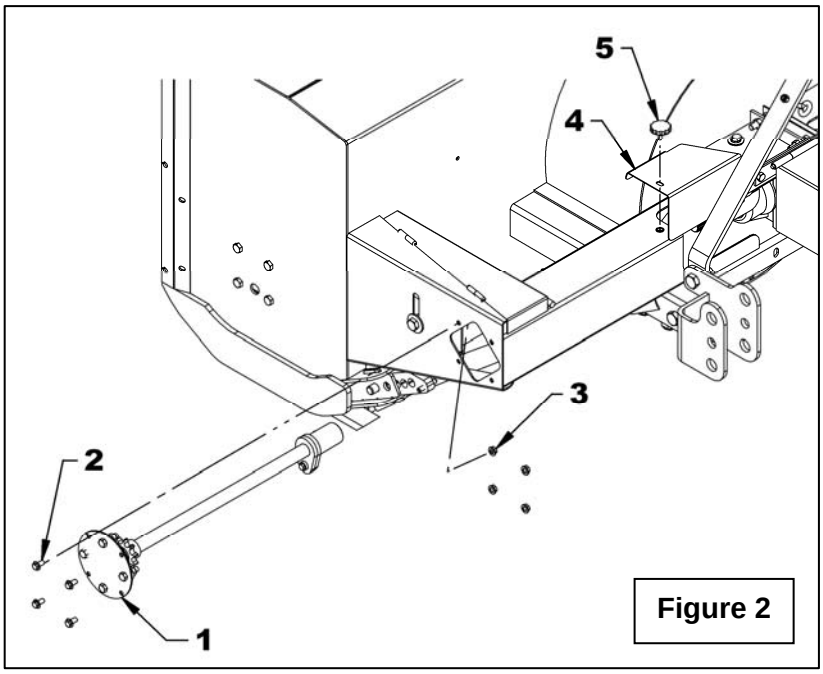

Figure 2

3. **Figure 3:** Enlarge of 1/8" on the four sides of the existing square hole and remake rounding of 1/2" radius to the four corners.

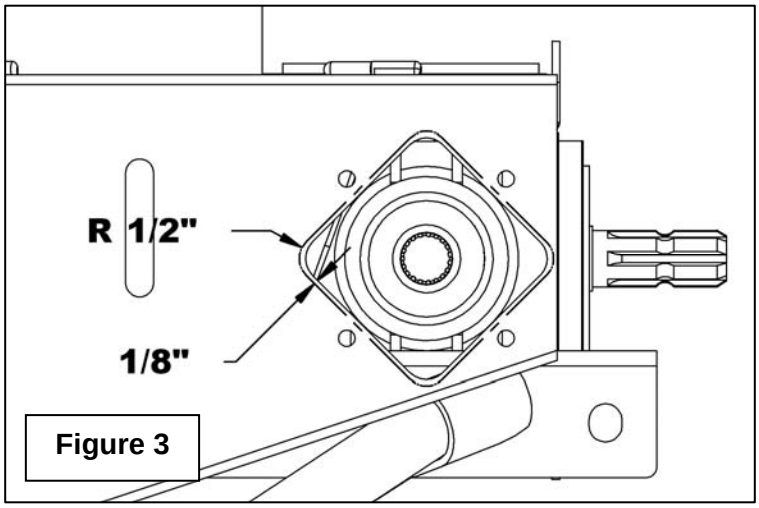

Figure 3

4. **Figure 4:** Place the new driving shaft support plate (item 1) to the same position than previously by aligning the four frame holes. With a tracing point, mark the materiel to be removed. Remove the plate and enlarge the "A" holes from the outside.

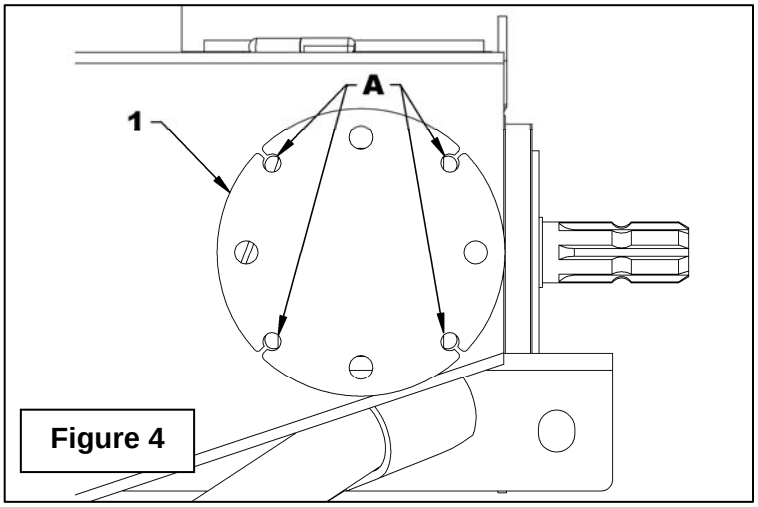

Figure 4

5. **Figure 5:** Open the rear cover (item 1) and draw lines in the dimensions of the hatched part on the fig.5. Cut the draw part and break the sharp corners with a file to avoid possible injury.

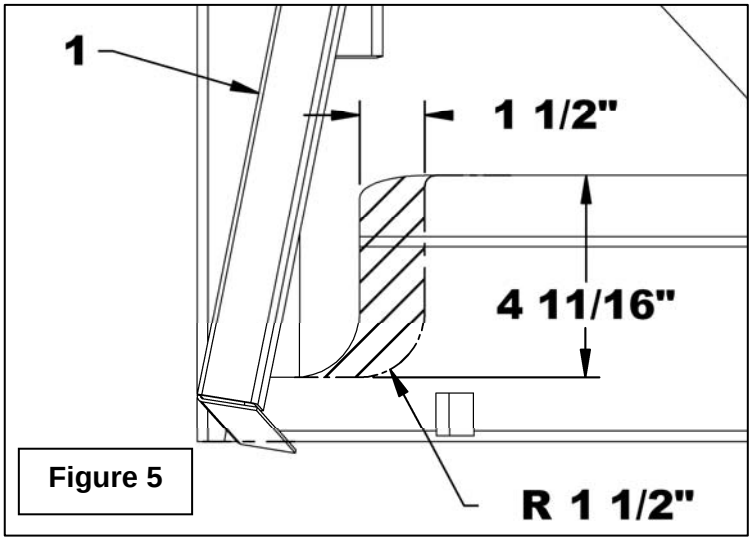

Figure 5

6. **Figure 6:** Assemble the plate (item 1) to the bearing and driving shaft already pre-assembled (item 2) with four 1/2"NC x 1 1/2" bolts, 1/2" lockwashers and hex nuts (items 3-4-5) then install on the snowblower.

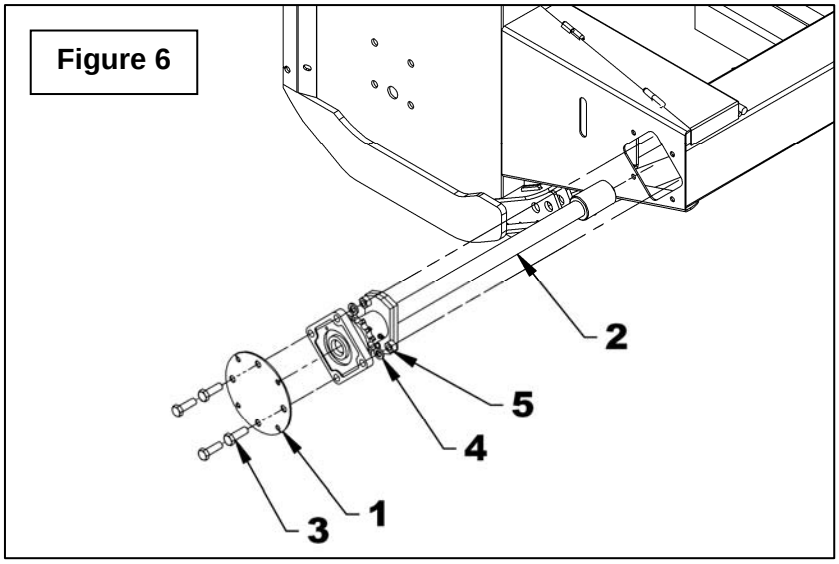

7. **Figure 7:** Install the pre-assembled plate (item 1) aligning it with the splined shaft of the gearbox and secure with the four serrated flange bolt 3/8" NC x 3/4" lg. and nuts taken off on figure 2. Tighten to 20 lbs-ft (27 N-M). Reinstall the rear guard.

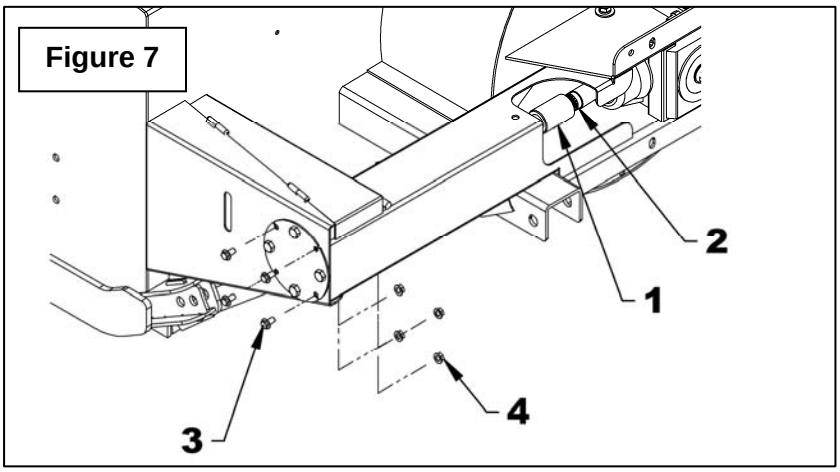

8. **Figure 8:** Install the new chain and secure with the opening of the coupling link oriented in the opposite direction of the rotation. Reinstall the front guard.
9. **Figure 8:** Attach the spring and with a lever under the idler near the driving pinion as shown, lift the idler until the overall spring length is no more than 8 1/2". Tighten the nut (item 1) to 230 lbs-ft (312 N-M)

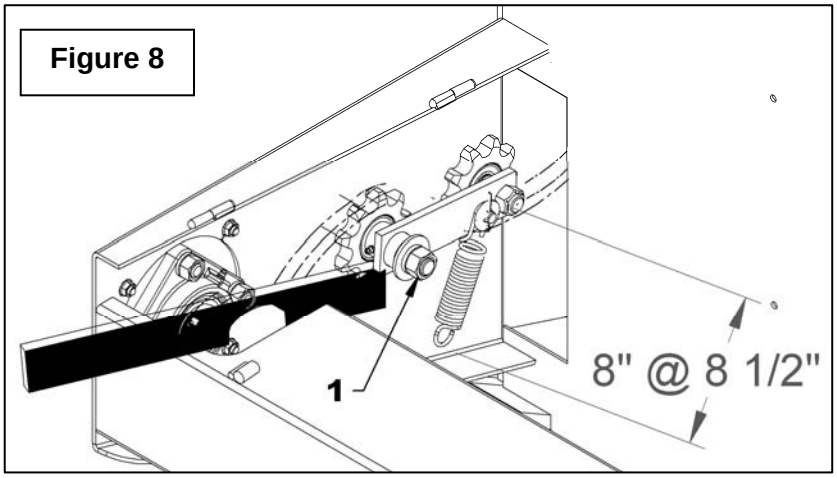

PARTS
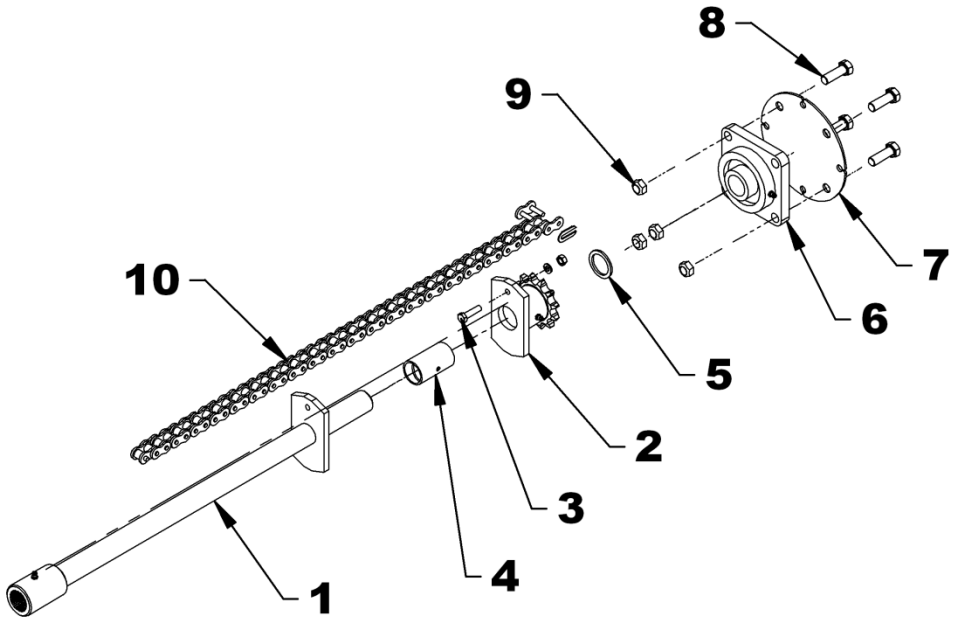
REF.	DESCRIPTION	QTY	PART # SA74-L	PART # SA80-L
1	Driving shaft	1	669346	669347
2	Shear plate	1	669344	669344
3	Hex. bolt 5/16" NC x 1 3/4", lock washer, nut, PTD	1	669345	669345
4	Oilite bushing 1 1/2" lg.	1	4300072	4300072
5	Spacer ring 1/8"	1	669256	669256
6	Bearing 1 1/4", 4 holes with 1 grease fitting	1	4300118	4300118
7	Driving shaft support	1	669356	669356
8	Hex. bolt 1/2 NC x 1 1/2", gr. 5, PTD	1	0100070	0100070
9	Nut, Stover 1/2" NC, PTD	1	11100006	1100006
10	Chain #60H x 94 links (inc. connecting link)	1	655788	655788